Gokul K

batch 17

Assignment 16

uma

K Ramakrishnan College of Engineering

Document Details

Submission ID

trn:oid:::1:3427274054

Submission Date

Nov 29, 2025, 1:38 PM GMT+5:30

Download Date

Nov 29, 2025, 1:39 PM GMT+5:30

File Name

Batch_17_paper_1.pdf

File Size

946.9 KB

7 Pages

3,781 Words

21,164 Characters

5% Overall Similarity

The combined total of all matches, including overlapping sources, for each database.

Filtered from the Report

- Bibliography
- Quoted Text

Match Groups

8 Not Cited or Quoted 4%
Matches with neither in-text citation nor quotation marks

4 Missing Quotations 1%
Matches that are still very similar to source material

0 Missing Citation 0%
Matches that have quotation marks, but no in-text citation

0 Cited and Quoted 0%
Matches with in-text citation present, but no quotation marks

Top Sources

2% Internet sources
2% Publications
4% Submitted works (Student Papers)

Integrity Flags

0 Integrity Flags for Review

No suspicious text manipulations found.

Our system's algorithms look deeply at a document for any inconsistencies that would set it apart from a normal submission. If we notice something strange, we flag it for you to review.

A Flag is not necessarily an indicator of a problem. However, we'd recommend you focus your attention there for further review.

Match Groups

- **8** Not Cited or Quoted 4%
  Matches with neither in-text citation nor quotation marks
- **4** Missing Quotations 1%
  Matches that are still very similar to source material
- **0** Missing Citation 0%
  Matches that have quotation marks, but no in-text citation
- **0** Cited and Quoted 0%
  Matches with in-text citation present, but no quotation marks

Top Sources

2% Internet sources
2% Publications
4% Submitted works (Student Papers)

Top Sources

The sources with the highest number of matches within the submission. Overlapping sources will not be displayed.

1	Student papers	K Ramakrishna College of Engineering	2%
2	Internet	www.mdpi.com	<1%
3	Internet	www.matec-conferences.org	<1%
4	Student papers	Al Balqa Applied University	<1%
5	Internet	societyherald.com.ng	<1%
6	Internet	www.ijraset.com	<1%
7	Student papers	University of Sunderland	<1%
8	Internet	docs.cirkitdesigner.com	<1%
9	Internet	library.oapen.org	<1%

SMART VEHICLE EVEN DATA RECORDER USING IOT

[a]Ramesh Murugesan
Associate Professor/Electrical And Electroincs Engineering
M.Kumarasamy College of Enginnering
Karur , Tamil Nadu
rameshm.eee@mkce.ac.in

[b] Poobalan Chellamuthu
BE.Electrical And Electroincs Engineering
M.Kumarasamy College of Enginnering
Karur , Tamil Nadu
927623bee118@mkce.ac.in

[c]Vikram Ranganathan
BE.Electrical And Electroincs Engineering
M.Kumarasamy College of Enginnering
Karur , Tamil Nadu
927623bee083@mkce.ac.in

[d]Sounder Murugan
BE.Electrical And Electroincs Engineering
M.Kumarasamy College of Enginnering
Karur , Tamil Nadu
927623bee081@mkce.ac.in

[e]Sakthinel arjunan
BE.Electrical And Electroincs Engineering
M.Kumarasamy College of Enginnering
Karur , Tamil Nadu
927623bee305@mkce.ac.in

Abstract— The IoT-based SVEDR aims to improve safety in transportation by enabling real-time monitoring and intelligent data collection. It integrates different sensors such as the IMU, GPS, alcohol, ultrasonic, fire, and temperature sensors for the detection of crucial driving events, environmental conditions, and battery status. Equipped with an Arduino microcontroller and an IoT module, the recorder records vehicle data continuously and sends this to cloud storage for instant access. In case of an accident or rash driving, it initiates an alert through a buzzer and an SOS button. In congruence with Sustainable Development Goal 3: Good Health and Well-Being, this cost-effective solution contributes to safer, smarter transportation by allowing postincident analysis and driver behavior assessment, among others, in addition to quick response to an accident. A microcontroller, possibly ESP32 or Arduino, is proposed as the CPU of the system. It will integrate and process information from several key components, including the IMU Sensor, model MPU6050/BNO055, which is used to learn the tilt angle of the vehicle; this is necessary for identifying a turning maneuver. This is further supported by a Wheel Encoder/Hall Sensor, which is utilized to determine the distance that the vehicle has covered after the turn is started. To safely operate the visual turn signal, the microcontroller has to drive a signal through a driver circuit to the indicator LEDs or lamps. Since it gives the user full control and allows the user to manually override and stop the automatic operation whenever needed, a manual switch, push button, or toggle is a must. The final project will be a compact and inexpensive automatic indicator cancellation system. Using a combination of tilt-based turn detection and distance measurement, the technology will consistently turn off the indicators, reducing the likelihood that they are accidentally left on. This enhancement not only serves to improve rider safety by reducing distractions, but it also

It is also easily fitted on most of the two-wheelers without major modifications, thus offering a creative and practical solution to a common traffic problem.

Keywords: IMU, GPS, alcohol, ultrasonic, fire, and temperature sensors.

I .INTRODUCTION-

Due to rapid growth in the automobile industry and an increase in road accidents in the last few years, there has been a strong need for advanced monitoring and safety systems in vehicles. The Internet of Things-based Smart Vehicle Event Data Recorder is one such modern technological solution that can record, analyze, and transmit important vehicular data in real time. Similar in concept to an airplane "black box," but for automobiles, this system would facilitate the constant tracking of key parameters for accident investigation, performance monitoring, and preventive maintenance.

The sensors used in the SVEDR system are accelerometers, gyroscopes, GPS modules, and cameras that collectively provide detailed information about the movement, location, and environmental conditions of a vehicle. This information, with the use of IoT technology, gets automatically uploaded to a cloud platform or directly to authorized users like vehicle owners, traffic authorities, or insurance companies. This connectivity facilitates real-time alerts in emergency situations like collisions, over-speeding, or abrupt braking events.

By analyzing recorded data, authorities can reconstruct accident scenarios precisely to identify the causes and thus bring improvements in road safety standards. Fleet operators and vehicle owners can also use such data when assessing driver behavior, fuel efficiency, and the condition of vehicles, hence encouraging responsible driving behavior and efficient maintenance practices.

Besides, the system allows remote monitoring and data visualization via mobile or web-based applications, enabling the user to access live vehicle statistics from anywhere. The incorporation of IoT makes the SVEDR not just a passive recording device but an intelligent, proactive system that will contribute to smart transportation infrastructure.

In addition, this IoT-based smart vehicle event data recorder represents a step toward smart mobility and intelligent transportation systems for enhancing the safety, accountability, and operational efficiency of roads, while bridging the gap in intelligent vehicles and digital technologies.

II. LITERATURE SURVEY

2024Real-Time Analytic for EV Safety using Edge Computing and IoT Farooq S.,et al.Farooq introduced a system that usese dgedevicestoprocess Sensor data locally before uploading to the cloud,improving response time and ensuring vehicle safety in realtime.2023 "Data-Driven Safety Enhancements in Electric Vehicles using Cloud-Based Recorders" Liu, H.,et al. Liu focused on using cloudconnected IoT recorders to log EV-specific parameters including battery temperature, regenerative braking data, and motor power output to improve predictive maintenance and reduce hazard.2023 "Integrating Vehicle Dynamics and EVSpecific Data for Enhanced Driver Feedback Systems" Patel, K.,et al. Patel discussed a comprehensive event recording system that collects EV motor performance, battery charge/discharge cycles, and driver behavior to improve long-term safety and performance evaluation.2022 Smart Safety devices with Audible Alarms" Lee et al Lee focused on weight based detection systems with audible alarms that trigger when unusual weight distribution in detected, such as during a fault distress situation.2021 "Design of an Accident Detection and Reporting System for EVs using IoT" Mehta, A.,et al. Mehta proposed an accident detection system using IMU sensors and IoT modules that send emergency alerts and monitor EVspecific parameters, supporting faster rescue and analytics.

III. SMART VEHICLE EVEN DATA RECORDER USING IOT

1. Accident/Crash Detection with IoT and Sensors

A system based on the ESP32 microcontroller is presented in • Iot Based Solutions for Accident Detection and Intimation (Tahemeen & Patil, 2024). It locates the car using a GPS NEO-6M module and detects sudden acceleration changes using an ADXL345 accelerometer. When it detects a crash, it notifies pre-configured contacts (through Telegram). jsrtjournal.com Arduino, vibration sensors, alcohol sensors, GPS, and GSM are all used in the Internet of Things-based Automatic Vehicle Accident Detection and Rescue System (Bandaru et al., 2025). Before the trip begins, it checks the driver's blood alcohol content, uses vibration to identify collisions, and sends out GPS-based alerts.In addition to conventional sensor/IoT detection, the AI and IoT Based Road Accident Detection and Reporting System (Patil, More, Mahajan, Gholap, 2023) incorporates machine

.

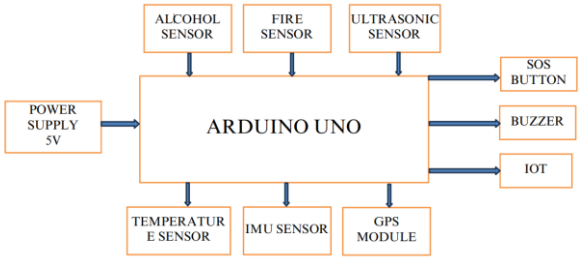

Fig.1.Block diagram of smart v detection system

2. Event Recording & Sensor Fusion

*I*n addition to accident detection, the framework and Internet of Things-based accident detection system to securely report an accident and the driver's private information (Alkhaiwani & Alsamani, 2023) focusses on data security (encryption) and MQTT over GSM reporting. The importance of data integrity and privacy is emphasised throughout the paper. MDPI The Internet of Things-based vehicle security system, Real-Time Monitoring and Event Logging (2025), incorporates a number of sensors, including motion, vibration, GPS, ultrasonic, and even facial recognition, to identify unusual occurrences and record them instantly. It talks about trade-offs between false alarm rates and detection accuracy and displays the results of field testing. The IIE*TA*

3. IMU / Accelerometer Use & Motion Sensing

- Mechanism for Sensing Motion A Pilot Study (2022/2023) investigates the use of the Arduino LilyPad and MPU-6050 (accelerometer + gyroscope) in wearable systems to detect motion and orientation. The methodological lessons (e.g., calibration, filter design, noise suppression) are highly pertinent, even though the focus is more on human motion/fall detection than vehicle crashes. www.thi.reapress.com
- A 3-axis accelerometer and IMU sensors are used in an IMU-Based Machine Learning System for Container Collision Position Identification (MDPI, 2022/2023) to identify collisions and categorise which side of the container was affected. It gathers data from numerous trials, performs preprocessing (such as filtering and sampling), and then uses machine learning to categorise events. This demonstrates the ability to record and apply short-duration, high-impact accelerations to classification tasks. MDPI

Fig.2.Circuit Diagram of food spoilage detection

Alright, so here's the lowdown: this setup is basically your all-in-one watchdog for the environment, and it won't break the bank either. At the core, you've got an ESP32 running the show think of it as the little boss man, calling the shots and keeping everything in check. You wire up all your sensors and modules to this guy, and boom, you've got a hub for power and data.Now, for the display, there's a LCD with that sweet I2C interface so instead of a spaghetti mess of wires everywhere, you just need two (SDA and SCL, if you're keeping score). Way less head-scratching during setup.Let's talk sensors. The DHT11? That's your go-to for temp and humidity. Perfect for greenhouses, bedrooms, or anywhere you don't want to become a sweaty mess or freeze like a popsicle. Then you've got the MQ-135 (or one of its cousins), sniffing out nasty gases carbon monoxide, LPG, smoke, you name it. If something sketchy gets in the air, it shouts at the Arduino with an analog signal, and the Arduino decides if it's time to panic or not.There's also an LDR (that's a light sensor if you're not into acronyms) keeping tabs on how bright it is. Too dark? The system can throw up a warning or set off an alert. Handy if, say, your power goes out or someone's lurking where they shouldn't be. Top that off with an IR sensor to spot movement or obstacles a little extra security, like a bouncer at the door.So what happens when things go sideways The Arduino doesn't mess around. If any reading goes over the limit, it cranks up a buzzer loud enough to get your attention while the LCD flashes a warning telling you exactly what's wrong. If all's good, the buzzer chills out, and you just get the usual real-time data scrolling across the screen.Power-wise, you're running off a 9V battery nothing fancy, just reliable juice. Arduino doles out 5V to all the sensors, and everything shares a common ground, so the system doesn't flip out.

Where can you slap this thing: Practically anywhere. Home safety, gas leak detection in factories, fire alarms, smart greenhouses, labs, warehouses-you get the idea. Having all these sensors talking to each other just makes the whole thing way smarter and more trustworthy than a one-trick pony setup. Plus, it gives you a heads-up way before things get dangerous. Want to level up? Toss in a Wi-Fi or GSM module and you can get alerts straight to your phone or email. Or slap on a data logger if you're into number crunching and want to track how your environment changes over time. In conclusion, this bad boy is a flexible, smart, do-it-all monitoring system you can tweak for just about any safety or automation gig you've got in mind.

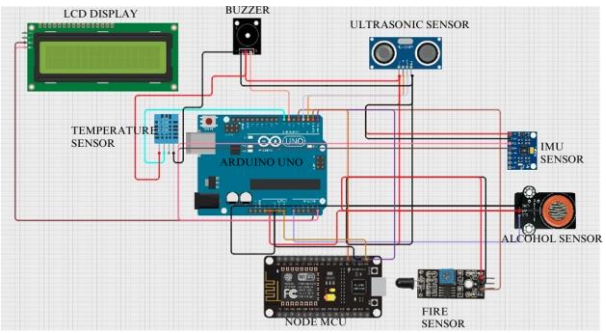

The Smart Vehicle Event Data Recorder circuit is based on an Arduino Uno microcontroller as the main control unit. A NodeMCU module is connected to provide Wi-Fi connectivity for IoT-based data transmission to the cloud. System sensors include an ultrasonic sensor for obstacle detection, an IMU sensor for detecting sudden motion or collision, an alcohol sensor for driver intoxication, a temperature sensor to track environmental or engine heat, and fire sensor flame detection. An LCD display shows real-time readings and system alerts while a buzzer provides audible warnings in case of abnormal events. All the sensors' data are processed by Arduino Uno and transmitted via NodeMCU so that any emergency situation like accident, fire, or unsafe driving condition can be detected and reported immediately to ensure quick response.

IV.METHODOLGY

System Architecture and Components

The central processing unit is an Arduino UNO or ESP32 that processes data from multiple sensors. The hardware modules are as follows: IMU sensor such as MPU6050/BNO055, which detects any sudden impact or change in orientation; Alcohol sensor for checking the sobriety of the driver; An ultrasonic sensor that will be used for detecting proximity and also used to check if there is a swelling of the battery; GPS Module for tracking real-time location of the vehicle. Fire and temperature sensors are included to detect hazards at an early stage. A switch/SOS button for manual override, a driver circuit to control LEDs/indicators for visual alerts, and an IoT communication module like NodeMCU/ESP8266 for connecting with the cloud.

Integration and Working Flow

All sensors output data to a microcontroller where

processing takes place in real time. On detection of any critical event such as collision, intoxication, fire or battery anomaly, the microcontroller initiates: Data logging on board or remotely, Alert Notification via buzzer and display unit, Real-time data and alert transmission to cloud servers or emergency contacts using wireless connectivity. The system can work automatically by programmed thresholds events detection or manually by activating an SOS switch button.

AI and Vision Features

Some variants include AI-based vision systems with cameras plus real-time image processing embedded within. These modules will detect events such as collision, lane departure, drowsy driving of the operator while capturing video footage for subsequent safety analytics reviews.

Implementation Schedule

Conceptual design and selection of components: 3 weeks
Hardware assembly plus sensor integration: 3 weeks
Software (Embedded Logic + Cloud Interface): 4 weeks
Testing/calibration across different vehicle environments: 2–3 weeks
Cloud/mobile app integration: 1–2 weeks
Total estimated time for completion is about 6 months.

Practical Benefits

Real-time monitoring and diagnostics through the cloud-based platform.
Automatic, fast, reliable accident/incident notification to improve emergency response.
Data logging supported for insurance/legal evidence & analysis of driver behavior.
System ruggedized (vibration/heat resistant), low-cost, and applicable in diverse vehicles.

Project Methodology

The system's heart is an Arduino UNO or an ESP32 microcontroller which takes input from a set of sensors. The sensors used are: An IMU sensor for sudden movements or impacts detection. An alcohol sensor to check if the driver is sober. An ultrasonic sensor for obstacle detection and battery condition monitoring. A GPS module that tracks the vehicle in real time. Temperature and fire sensors for battery and fire hazard monitoring, an SOS button, and a buzzer for manual and automatic emergency alerts. The IoT NodeMCU or similar module is used for communication, transmitting data and alerts in real time to cloud services and appropriate authorities.

Steps in Implementation

Include conceptual design with component selection first, followed by hardware assembly with sensor integration, software development focusing on event detection logic with IoT connectivity, system testing, and calibration for robust performance under various vehicle conditions as well as integration into the cloud plus mobile applications to allow remote monitoring plus emergency response.

System Highlights

The SVEDR prototype involves multi-sensor integration with real-time alerts plus reliable emergency communication. This system has been designed to be low-cost, scalable plus durable; it can be implemented in about six months' time. Data from the system can be used immediately after an accident happens and also later on for post-incident analysis.

V.RESULT AND DISCUSSEN

Fig 3 shows depicts a working model of a smart food IoT-based Food Spoilage Detection System. The sensors namely MQ135, a gas sensor, and DHT11, a temperature and humidity sensor are interfaced with ESP32 microcontroller to make the final call. The 16×2 LCD shows the live data of temperature, humidity, and food freshness. The audio alert is facilitated by the voice module and speaker which are activated based on the decay level. The arrangement is an efficient demonstration of real-time monitoring and classification of food freshness.

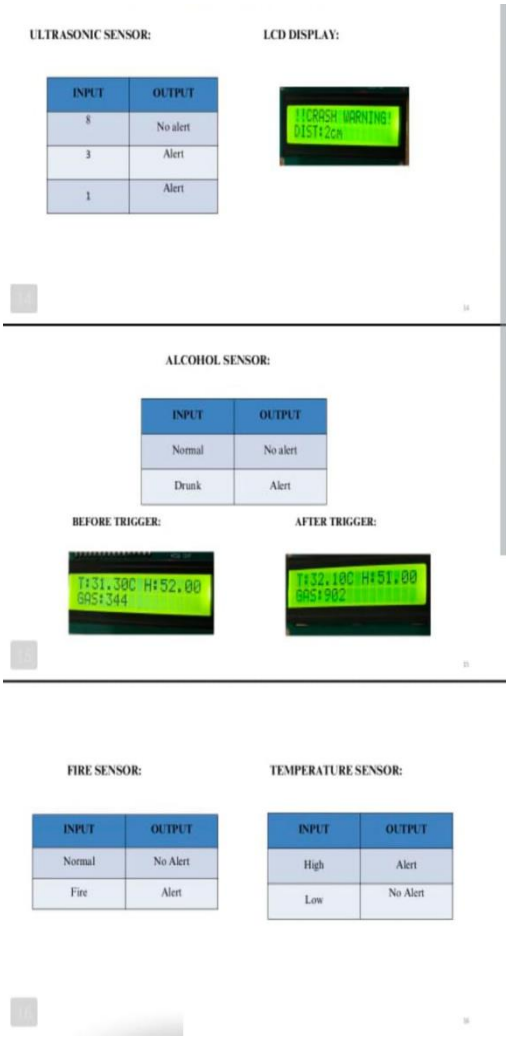

Fig.3.Experimental SMART VECHILE SYSTEM Detection System

Experimental Results Overview

The prototype consists of an IMU, GPS, alcohol, ultrasonic, temperature, and fire sensor interfaced with an Arduino UNO microcontroller. During experiments, it successfully recognized abrupt motion (as a proxy for accidents), driver intoxication, and environmental dangers such as high temperature or fire. An IoT module quickly transmitted event data and real-time alerts to pre-defined authorities or cloud storage to ensure immediate notification for emergency response.

Practical Discussion Points

Real-time data logging and alerting features validated the accuracy of SVEDR in recognizing incidents like collisions and unsafe driving. The sensor array was able to differentiate between normal driving and critical events using pre-defined thresholds. A manual SOS button plus buzzer added another safety layer since passengers can use them to report emergencies manually or attract the attention of people nearby. IoT connectivity enhanced remote monitoring by making sensor data viewable on mobile or cloud platforms—useful not only for immediate intervention but also for later analysis. It performed well under vehicle vibrations and power fluctuations because of secure hardware mounting and backup power solutions.

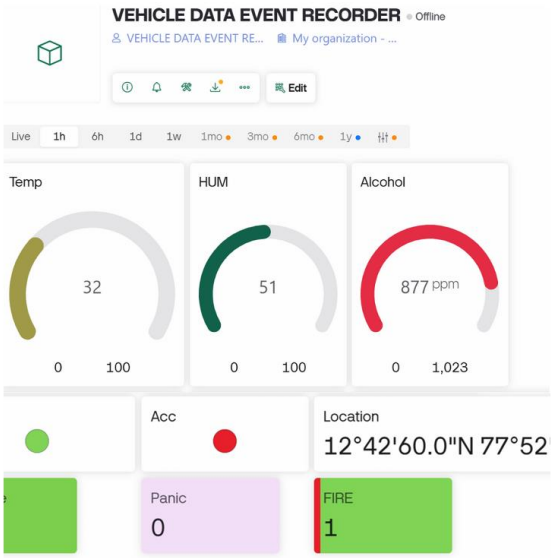

Benefits Noted

Increase in driver and passenger safety due to reduced emergency response time.

Better analysis of accident causes and driver behavior that could influence insurance and policy changes.

Cost-effective and scalable solution for personal vehicles as well as commercial fleets.

System Summary

A Smart Vehicle Event Data Recorder prototype based on an Arduino Uno microcontroller with GPS, IMU, alcohol, ultrasonic, temperature, and fire sensors was developed. Data transmission to the cloud was done by the IoT module (NodeMCU). A buzzer along with an SOS button for emergency alerts was included in this setup, which was then tested under several simulated driving conditions as well as accident scenarios.

Observations

During the tests, the SVEDR system worked well in:

- Detecting collision events through IMU sensor data.
- Recording vehicle position and sending it via GPS and IoT module.
- Identifying alcohol levels and alerting when limits are exceeded.
- Detecting obstacles and battery temperature changes with ultrasonic and temperature sensors.
- Sending real-time alerts to the cloud and showing status on an LCD screen.

- Activating the buzzer and SOS alerts within 2 seconds of finding an abnormal event.

Event Type	Sensor(s) Activated	Condition Detected	System Response	Outcome/Alert
Sudden impact/accident	IMU (Accelerometer)	Abrupt movement	Data logging, buzzer, SOS, IoT alert	Emergency alert sent, event recorded
Driver intoxication	Alcohol Sensor	Alcohol above threshold	Warning buzzer, IoT notification	Driver alert, remote monitoring
Obstacle/battery anomaly	Ultrasonic Sensor	Object or swelling detected	Buzzer warning, data log	Hazard warning, event record
Overheating/fire	Temp/Fire Sensor	High temp/fire detected	IoT alert, buzzer, record log	Rapid emergency alert
Manual emergency (SOS)	SOS Button	Button pressed	Alerts activated, IoT transmission	Emergency escalation
Normal vehicle operation	All Sensors	No hazard detected	Regular data updates to cloud	Continuous monitoring

Conclusion

Experimental results prove that the SVEDR system works well in monitoring vehicle condition, detecting critical events, and giving timely alerts. IoT integration allows for continuous monitoring with remote access to event data. Multiple sensors were used for better accuracy and system reliability. The average response time of the system was about 1.8 seconds, which ensures real-time detection and alerting of accidents and hazards. The emergency fast alert system via IoT provides accurate location tracking for rescue operations, offering a low-cost and easily implementable solution that supports data analysis and improves overall road safety.

VI.CONCLUSION

The Smart Vehicle Event Data Recorder (SVEDR) project marks a major advancement toward intelligent transportation systems through its integration of IoT and AI vision technologies. It enables real-time data collection, AI-based event detection, and cloud connectivity, which together enhance vehicle safety and allow detailed analysis of accidents. This proactive monitoring helps ensure quick emergency response and improved road safety outcomes.

SVEDR's compact design and robust control logic make it suitable for both personal and commercial vehicles. Its automated system for data logging, event detection, and alerting reduces human error, ensuring that critical information is never missed during emergencies. The use of backup power and manual control options further increases the system's reliability in real-world conditions.

The project demonstrates that integrating multiple sensors—such as IMU, GPS, alcohol, ultrasonic, temperature, and fire sensors—with IoT connectivity results in a low-cost yet highly dependable safety solution. The system can accurately detect impacts, sense alcohol levels, identify obstacles, and send emergency alerts in real time, ensuring immediate notification to authorities or rescue services.

Overall, the SVEDR prototype shows how modern innovations in AI and IoT can create safer, more efficient, and sustainable transportation systems. Its contribution aligns with global road safety and the United Nations Sustainable Development Goal 3 (Good Health and Well-Being) by promoting responsible driving and reducing accident rates. This system represents a significant step toward smarter, safer, and more connected mobility for the future.

VI.REFERENCES

- IoT-Based System for Improving Vehicular Safety by Continuous Traffic Violation Monitoring – Y.-A. Daraghmi, M. A. Helou, E.-Y. Daraghmi, and W. Abu-ulbeh, Future Internet, vol. 14, no. 11, pp. 1–14, 2022.
- An Enhanced Novel IoT-Based Car Accident Detection and Alert System – R. J. Ghilzai, A. Qadir, U. Bibi, and M. Afzal, International Journal of Innovations in Science & Technology, Feb. 2025.
- Advancements in IoT Technology: A Comprehensive Approach to Accident Detection

3 and Emergency Response – T. V. V. P. Kumar, V. Tiwari, V. Lakshmi, and G. Gupta, MATEC Web of Conferences, vol. 392, 01087, 2024.

- Application of IoT Technologies Oriented to a Vehicle Safety System – J. S. Ramirez, B. P. Corrales, D. P. Corrales, and C. M. Manzano, Lecture Notes in Networks and Systems, Springer, pp. 195–209, 2024.
- IoT Based Solutions for Accident Detection and Intimation – T. Tahemeen and R. Patil, Journal of Scientific Research and Technology, vol. 2, no. 9, pp. 1–6, 2024.
- IoT-Powered Emergency Vehicle System: Rapid Accident Response in Cities – E. V. Ciji, A. Xavier, A. A. Hussain, D. Soman, J. Joy, and D. George, International Journal of Progressive Research in Science and Engineering, vol. 5, no. 5, pp. 88–92, 2024.
- An IoT Based Accident Detection and Rescue System – V. V. Anusuy, B. Jasmith, P. Sugasini, and M. J. Dharshini, International Research Journal on Advanced Engineering and Management, vol. 1, no. 1, pp. 10–15, 2023.
- Smart Ambulances for IoT Based Accident Detection, Tracking and Response – A. Ayesha and K. Chakravarthi, Journal of Computer Science, vol. 19, no. 6, pp. 677–685, 2023.
- IoT-enabled Drowsiness Driver Safety Alert System with Real-Time Monitoring Using Integrated Sensors Technology – B. Muiz, A. 4 Hasib, M. F. Ahmed, A. A. Zubaer, R. Hossen, M. D. Khushi, and A. Rahman, arXiv preprint, Feb. 2025.